RACEWORKS™

PASSION FOR PERFORMANCE

INJ-504-11MM (Blue Dot) Injector Information

Part Number:	INJ-504-11MM
Length:	3/4 Length
Connector:	Denso/Sumitomo
O-Ring Diameter:	11mm Top and Square Section Bottom
Coil Resistance:	12 Ω @ 22°C
Min Opening Voltage:	10V @ 22°C
Test Fluid:	N-Heptane
Fluid Density:	0.684 g/cm3
Fluid Viscosity:	0.61 mm2/s
Test Temperature:	21±2°C
Test Pressure:	300, 400 and 500 kPa
Test Voltage:	6-15 V
Qstat, Static Flow Rate	1200 cc/min ±1.5%
Qdyn, Dynamic Flow Rate	86.6 mg/pulse @ 7.5ms
Fuel Compatibility	Gasoline, Ethanol and Methanol
Spray Pattern	Narrow Cone
Spray Direction	Straight

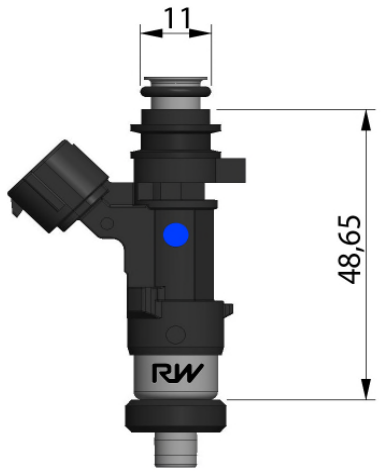

Slope [g/s] vs. Pressure [kPa]

Fuel Pressure

[psi]	40.0	43.5	50.0	55.0	58.0	60.0	65.0	72.5	80.0	90.0
[kPa]	276	300	345	379	400	414	448	500	552	621
[g/s]	13.56	14.13	15.14	15.79	16.14	16.35	16.80	17.29	18.17	19.27

Injector Offset [ms] vs. Pressure [kPa] vs. Voltage [V]

Fuel Pressure

Voltage [V] \ [psi]	40.0	43.5	50.0	55.0	58.0	60.0	65.0	72.5	80.0	90.0
[kPa]	276	300	345	379	400	414	448	500	552	621
15	0.865	0.874	0.890	0.903	0.911	0.914	0.924	0.938	0.952	0.970
14	1.126	1.129	1.135	1.139	1.142	1.153	1.180	1.222	1.263	1.319
13	1.313	1.325	1.348	1.365	1.376	1.418	1.522	1.681	1.839	2.050
12	1.566	1.595	1.648	1.689	1.714	1.872	2.256	2.844	3.431	4.211
11	1.898	1.964	2.087	2.180	2.237	2.461	3.006	3.838	4.671	5.776
10	2.281	2.667	3.391	3.939	4.276	4.389	4.661	5.077	5.493	6.045
9	4.144	4.461	5.057	5.507	5.785	6.025	6.608	7.500	7.500	7.500
8	6.066	6.097	6.154	6.197	6.224	6.403	6.836	7.500	7.500	7.500
7	7.500	7.500	7.500	7.500	7.500	7.500	7.500	7.500	7.500	7.500
6	7.500	7.500	7.500	7.500	7.500	7.500	7.500	7.500	7.500	7.500

Static Flow Rate vs. Pressure [kPa]

Fuel Pressure

(psi)	40.0	43.5	50.0	55.0	58.0	60.0	65.0	72.5	80.0	90.0
(kPa)	276	300	345	379	400	414	448	500	552	621
[g/min]	13.27	13.83	14.82	15.55	16.00	16.30	17.01	18.10	19.02	20.17
[cc/min]	1166	1215	1302	1366	1405	1432	1495	1590	1670	1772

For Ford/GM Plug and Play data, please visit
https://www.raceworks.com.au/fuel/injectors/data/INJ-504

RACEWORKS™

PASSION FOR PERFORMANCE

INJ-504-11MM (Red Dot) Injector Information

Part Number:	INJ-504-11MM
Length:	3/4 Length
Connector:	Denso/Sumitomo
O-Ring Diameter:	11mm Top and Square Section Bottom
Coil Resistance:	12 Ω @ 22°C
Min Opening Voltage:	10V @ 22°C
Test Fluid:	N-Heptane
Fluid Density:	0.684 g/cm3
Fluid Viscosity:	0.61 mm2/s
Test Temperature:	21±2°C
Test Pressure:	300, 400 and 500 kPa
Test Voltage:	6-15 V
Qstat, Static Flow Rate	1250 cc/min ±1.5%
Qdyn, Dynamic Flow Rate	89.3 mg/pulse @ 7.5ms
Fuel Compatibility	Gasoline, Ethanol and Methanol
Spray Pattern	Narrow Cone
Spray Direction	Straight

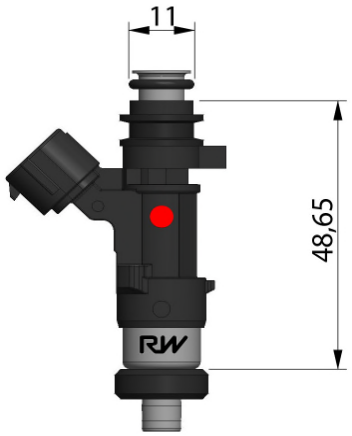

Slope [g/s] vs. Pressure [kPa]

Fuel Pressure

[psi]	**40.0**	**43.5**	**50.0**	**55.0**	**58.0**	**60.0**	**65.0**	**72.5**	**80.0**	**90.0**
[kPa]	**276**	**300**	**345**	**379**	**400**	**414**	**448**	**500**	**552**	**621**
[g/s]	13.85	14.44	15.29	16.02	16.51	16.84	17.72	19.19	20.16	21.38

Injector Offset [ms] vs. Pressure [kPa] vs. Voltage [V]

Fuel Pressure

[psi]	**40.0**	**43.5**	**50.0**	**55.0**	**58.0**	**60.0**	**65.0**	**72.5**	**80.0**	**90.0**
[kPa]	**276**	**300**	**345**	**379**	**400**	**414**	**448**	**500**	**552**	**621**
Voltage [V]										
15	0.895	0.905	0.923	0.936	0.944	0.983	1.078	1.223	1.367	1.560
14	1.048	1.065	1.095	1.119	1.133	1.170	1.262	1.401	1.541	1.726
13	1.234	1.273	1.348	1.404	1.439	1.464	1.526	1.621	1.716	1.843
12	1.518	1.567	1.660	1.730	1.773	1.790	1.832	1.896	1.960	2.045
11	1.891	1.943	2.041	2.114	2.160	2.179	2.226	2.298	2.370	2.465
10	2.323	2.467	2.738	2.943	3.069	3.080	3.107	3.148	3.188	3.242
9	3.449	3.528	3.676	3.788	3.857	3.881	3.940	4.031	4.121	4.241
8	5.977	6.018	6.094	6.152	6.188	6.372	6.818	7.500	7.500	7.500
7	7.500	7.500	7.500	7.500	7.500	7.500	7.500	7.500	7.500	7.500
6	7.500	7.500	7.500	7.500	7.500	7.500	7.500	7.500	7.500	7.500

Static Flow Rate vs. Pressure [kPa]

Fuel Pressure

(psi)	**40.0**	**43.5**	**50.0**	**55.0**	**58.0**	**60.0**	**65.0**	**72.5**	**80.0**	**90.0**
(kPa)	**276**	**300**	**345**	**379**	**400**	**414**	**448**	**500**	**552**	**621**
[g/min]	13.61	14.19	15.34	16.12	16.56	16.84	17.47	18.27	19.20	20.37
[cc/min]	1196	1246	1347	1416	1455	1479	1534	1605	1687	1789

For Ford/GM Plug and Play data, please visit
https://www.raceworks.com.au/fuel/injectors/data/INJ-504

RACEWORKS™

PASSION FOR PERFORMANCE

INJ-504-11MM (Yellow Dot) Injector Information

Part Number:	INJ-504-11MM
Length:	3/4 Length
Connector:	Denso/Sumitomo
O-Ring Diameter:	11mm Top and Square Section Bottom
Coil Resistance:	12 Ω @ 22°C
Min Opening Voltage:	10V @ 22°C
Test Fluid:	N-Heptane
Fluid Density:	0.684 g/cm3
Fluid Viscosity:	0.61 mm2/s
Test Temperature:	21±2°C
Test Pressure:	300, 400 and 500 kPa
Test Voltage:	6-15 V
Qstat, Static Flow Rate	1225 cc/min ±1.5%
Qdyn, Dynamic Flow Rate	88.4 mg/pulse @ 7.5ms
Fuel Compatibility	Gasoline, Ethanol and Methanol
Spray Pattern	Narrow Cone
Spray Direction	Straight

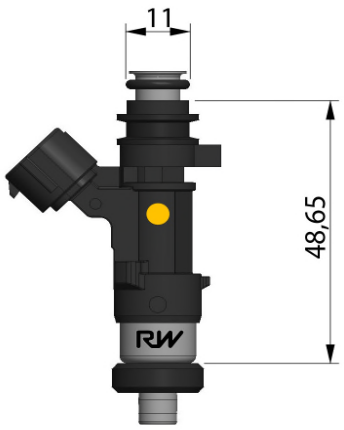

Slope [g/s] vs. Pressure [kPa]

Fuel Pressure

[psi]	40.0	43.5	50.0	55.0	58.0	60.0	65.0	72.5	80.0	90.0
[kPa]	276	300	345	379	400	414	448	500	552	621
[g/s]	13.70	14.28	15.15	15.89	16.38	16.73	17.61	19.11	20.08	21.30

Injector Offset [ms] vs. Pressure [kPa] vs. Voltage [V]

Fuel Pressure

Voltage [V] \ [psi]	40.0	43.5	50.0	55.0	58.0	60.0	65.0	72.5	80.0	90.0
[kPa]	276	300	345	379	400	414	448	500	552	621
15	0.896	0.901	0.911	0.918	0.923	0.956	1.038	1.163	1.287	1.453
14	1.038	1.057	1.092	1.119	1.135	1.163	1.229	1.331	1.433	1.569
13	1.199	1.245	1.333	1.399	1.439	1.456	1.497	1.560	1.622	1.706
12	1.453	1.512	1.623	1.707	1.759	1.767	1.788	1.821	1.853	1.896
11	1.831	1.874	1.954	2.014	2.051	2.076	2.135	2.225	2.315	2.435
10	1.908	1.995	2.158	2.282	2.358	2.427	2.594	2.850	3.107	3.446
9	3.629	3.672	3.751	3.811	3.848	3.863	3.902	3.960	4.018	4.096
8	6.183	6.195	6.217	6.234	6.245	6.421	6.847	7.500	7.500	7.500
7	7.500	7.500	7.500	7.500	7.500	7.500	7.500	7.500	7.500	7.500
6	7.500	7.500	7.500	7.500	7.500	7.500	7.500	7.500	7.500	7.500

Static Flow Rate vs. Pressure [kPa]

Fuel Pressure

(psi)	40.0	43.5	50.0	55.0	58.0	60.0	65.0	72.5	80.0	90.0
(kPa)	276	300	345	379	400	414	448	500	552	621
[g/min]	13.41	13.98	14.99	15.74	16.19	16.49	17.20	18.26	19.19	20.35
[cc/min]	1178	1228	1317	1383	1422	1449	1511	1604	1686	1788

For Ford/GM Plug and Play data, please visit
https://www.raceworks.com.au/fuel/injectors/data/INJ-504